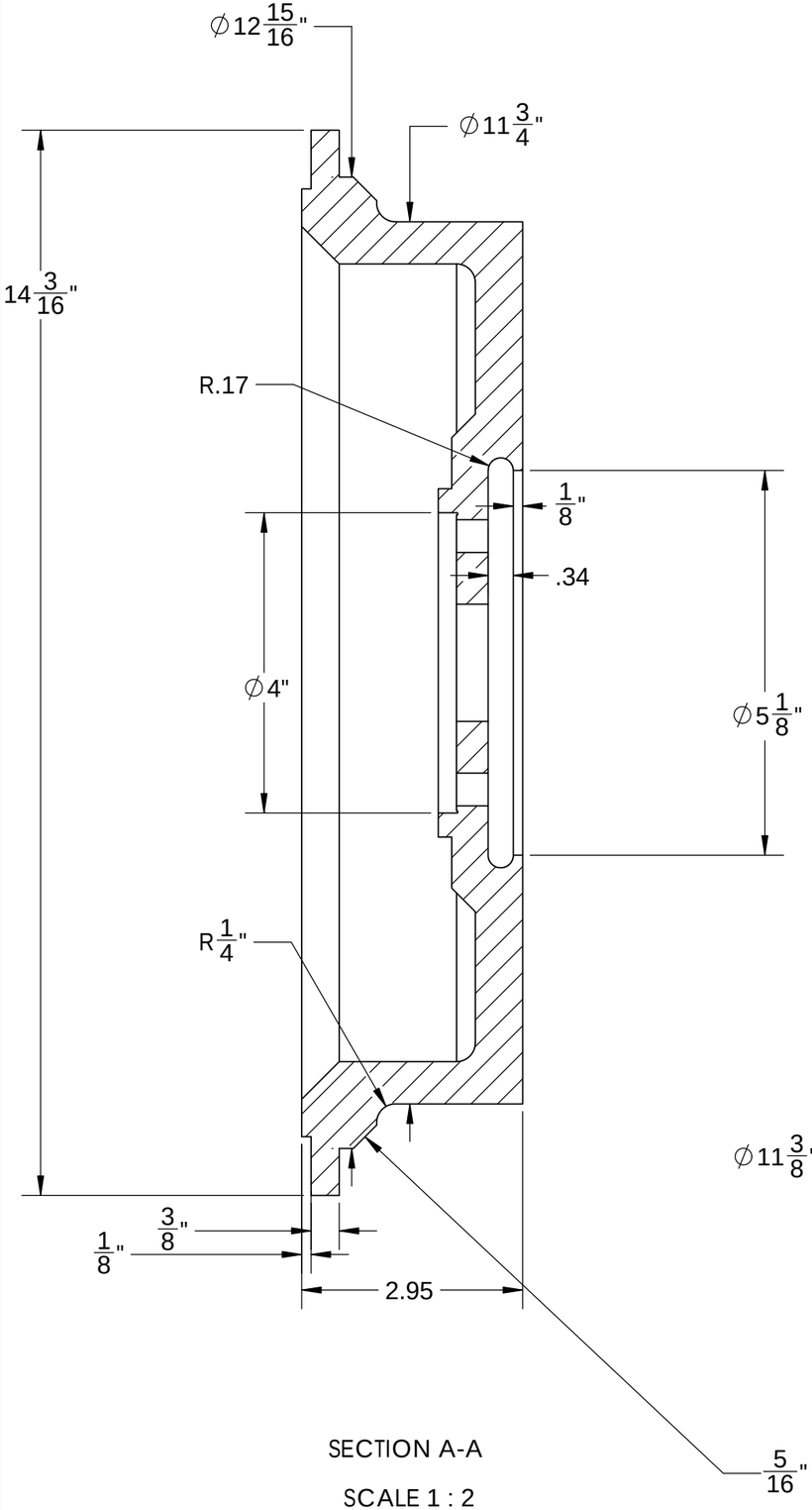

SECTION A-A

SCALE 1 : 2

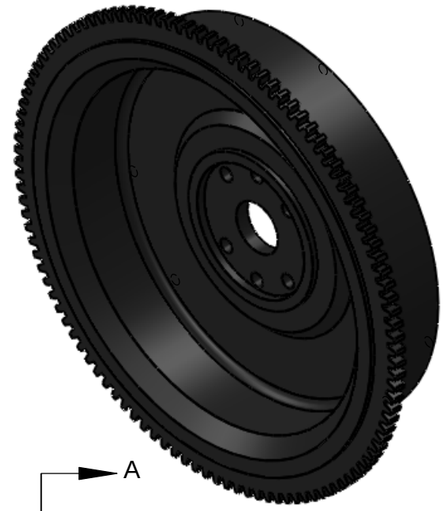

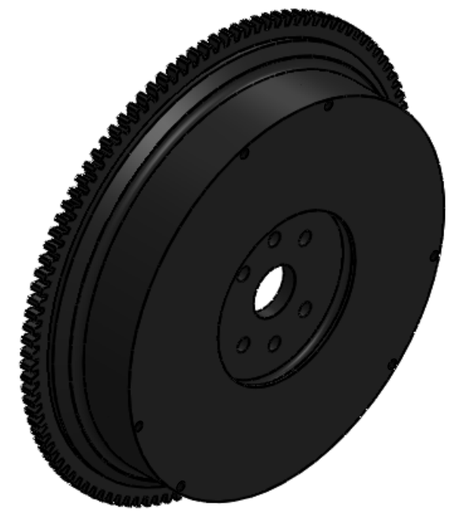

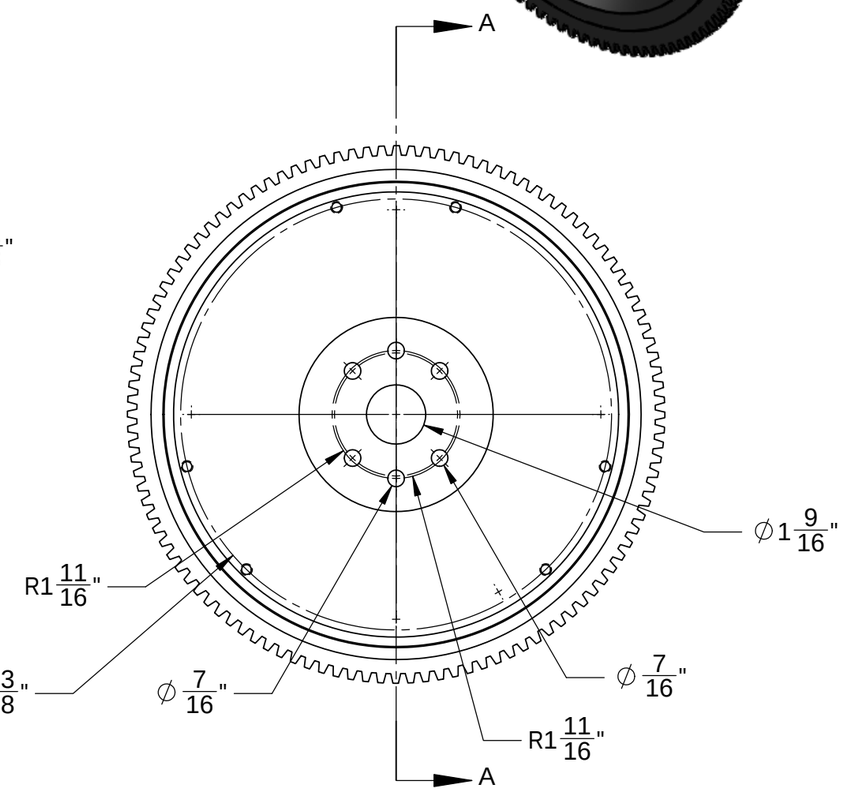

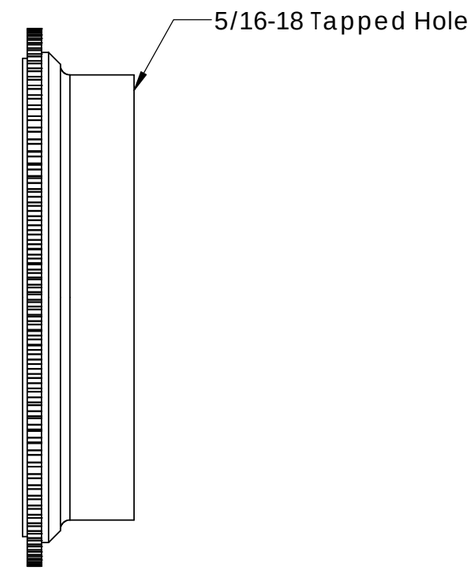

calulated weight 35.18 pounds

TITLE: Model B lightened flywheel V8 clutch		
SIZE B		REV
SCALE: 1:8	WEIGHT:	SHEET 1 OF 1