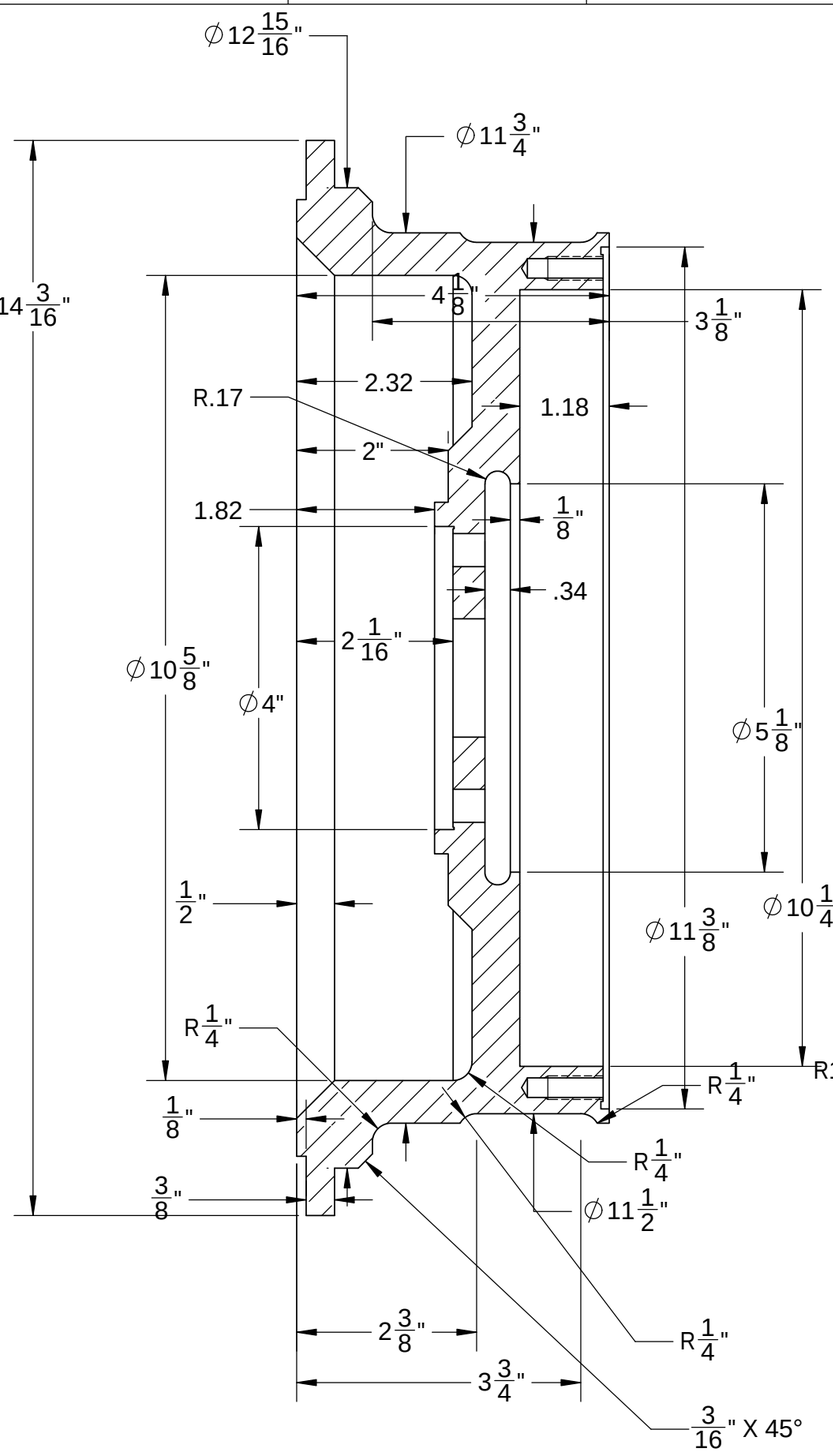

SECTION A-A

SCALE 1 : 2

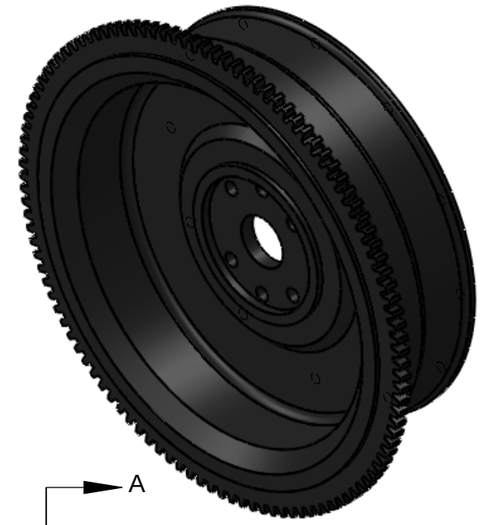

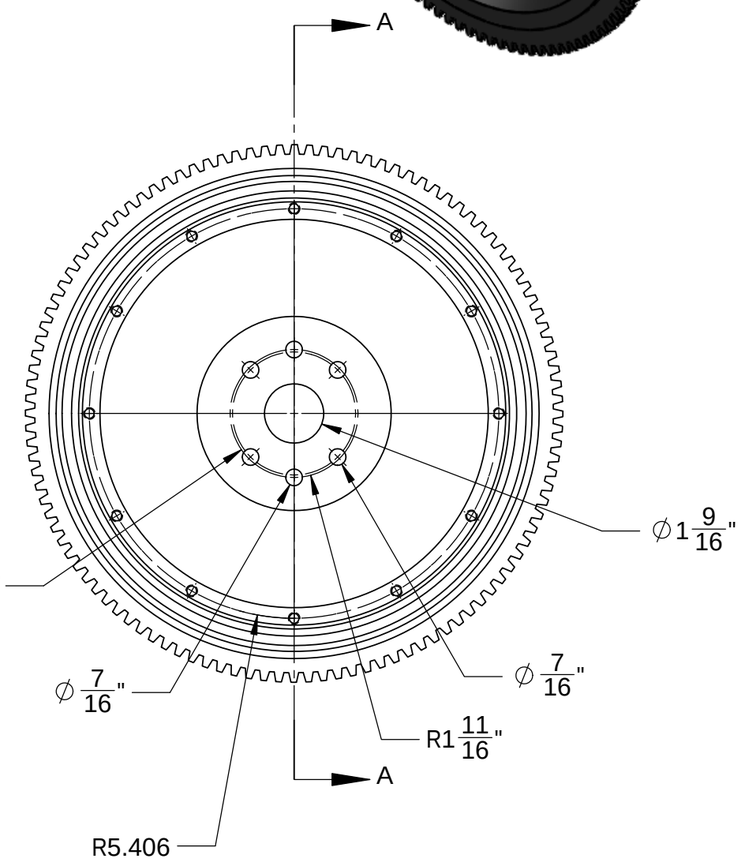

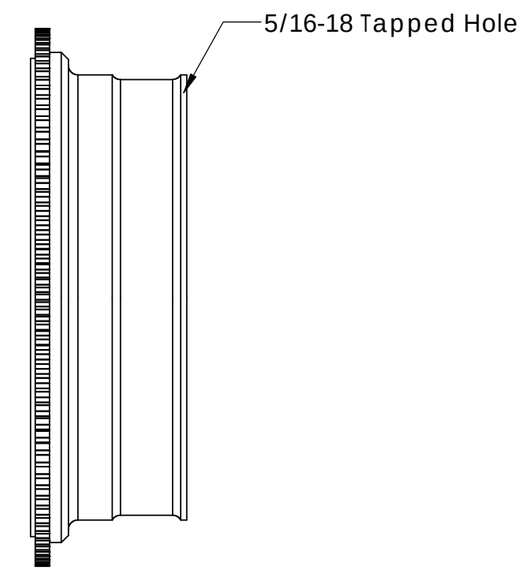

calulated weight 40.87 pounds

TITLE: Model B lightened flywheel		
SIZE B		REV
SCALE: 1:8	WEIGHT:	SHEET 1 OF 1